Mini Tube Fitting

EPLC
Male Elbow

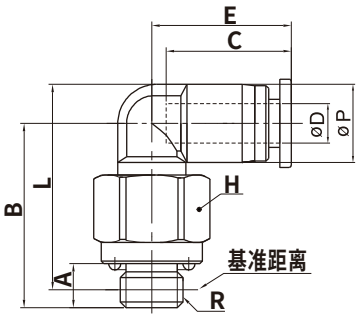

型号/ MODEL	ΦD	R	A	B	L	ΦP	C	E	对边H
EPL3-M3C	3	M3X0.5	3.0	12.7	14.3	6.2	9.3	11.1	5.5
EPL3-M5C		M5X0.8	3.5	15.7	15.5	6.2	9.3	11.1	8.0
EPL3-M6C		M6X1	4.5	16.7	17.8	6.2	9.3	11.1	9.0
EPL4-M3C	4	M3X0.5	3.0	13.6	16.6	8.1	12	16	8.0
EPL4-M5C		M5X0.8	3.5	15.6	17.4	8.1	12	16	8.0
EPL4-M6C		M6X1	4.5	16.6	17.6	8.1	12	16	9.0
EPL6-M5C	6	M5X0.8	3.5	15.3	20.0	10.7	12.4	16.7	8.0
EPL6-M6C		M6X1	4.5	17.3	20.1	10.7	12.4	16.7	9.0
EPL6-01C		R1/8	8.0	18.3	20.2	10.7	12.4	16.7	10.0